GRiDCASE 1500 Hardware Service Course

STUDENT GUIDE

COPYRIGHT (C) 1988 GRiD Systems Corporation
47211 Lakeview Blvd.
P.O. Box 500Fremont, CA 94537-5003
415-656-4700

Manual Name: GRiDCASE 1500 Hardware Service Course STUDENT GUIDE
Order Number: 965018-00
Issue Date: May 1988

No part of this publication may be reproduced, stored in a retrieval system, or transmitted, in any form or by any means, electronic, mechanical, photocopy, recording, or otherwise, without the prior written permission of GRiD Systems Corporation.

The information in this document is subject to change without notice.

Niether GRiD Systems Corporation nor this document makes any expressed or implied warranty, including, but not limited to the implied warranties of merchantability, quality, or fitness for a particular purpose. GRiD Systems Corporation makes no representation as to the accuracy or adequacy of this document. GRiD Systems Corporation has no obligation to update or keep current the information contained in this document.

GRiD Systems Corporation's software products are copyrighted by and shall remain the property of GRiD Systems Corporation.

Under no circumstances will GRiD Systems Corporation be liable for any loss or other damages arising out of the use of this manual.

GRiD and GRiDCASE are registered trademarks of GRiD Systems Corporation.

MS-DOS is a registered trademark of Microsoft Corporation.

Intel is a trademark of Intel Corporation.

CONTENTS

About This Book 1-6
Intended Audience 1-6
Documentation Conventions 1-6
Chapter 1-6
Section 1-6
Topic 1-6
Subtopic 1-7
Sub-subtopic 1-7
Syntax and Terminology 1-7
Command Syntax 1-7
Technical Terms 1-7
Other Books You May Need 1-8
Part One: Repairing the GRiDCASE 1500 Series Systems 1-9
Introduction to the System 1-9
External Overview 1-9
System Hook-Up/Turning on your System 1-10
Setting up the GRiDCASE 1500 Systems 1-11
Software Theory 1-12
ROM BIOS 1-12
Operating Systems 1-13
The MS-DOS Operating System 1-14
The MS-DOS User Interface 1-15
Storage devices 1-15
Built-In Commands 1-15
The Directory and Sub-Directories 1-16
Files and Filenames 1-17
Parameters 1-17
Batch Files 1-18
Hardware Theory of Operation 1-19
System Options 1-19
Expanded and Extended Memory Specification RAM 1-20
The Main Logic Board: a Component Level Tour 1-21
Powervalid/Reset Circuit 1-22
The Microprocessor (80C286 or 80C386) 1-22
Boot/BIOS ROM's 1-23
IBM AT Chip Set 1-23
FE 3000 CPU Controller 1-23
FE 3010 Peripheral Control Logic 1-23
FE 3020 Address Buffer 1-24
FE 3030 Data Buffer 1-25
Decode Circuitry and System Registers 1-25

I/O Mapping 1-25
Memory Mapping 1-25
Systems Registers 1-26
RAM and RAM Control 1-27
Expanded Memory Specification Control (1520 only) 1-27
Keyboard Controller (87C41) 1-28
72065 Floppy Controller 1-28
Contronics Gate Array (LPGA) 1-28
COM1 and COM2 Serial Ports 1-29
146818 Time of Day Clock Chip 1-29
Initialization Sequence 1-29
Boot Sequence 1-30
GRiDCASE 1500: Sub-Assembly Descriptions 1-31
Storage Device Options 1-33
Part Two: Repairing the Pocket/Pouch Storage Peripherals 1-34
Pocket/Pouch Storage Peripheral Overview 1-34
Pocket/Pouch Storage Peripheral Thoery of Operation 1-35
External Peripheral Diagnostics 1-35
The Common Floppy Interface Bus 1-35
The External Peripheral Bus 1-36
Pocket Floppy Disk Drives (32170/3401) 1-37
Pouch Floppy Disk Drives (3402/3404) 1-38
Pouch Tape Drive (3403) 1-39
Part Three: Corresponding with GRiD 1-41
Using the Parts Desk 1-41
Ordering Spare Parts 1-41
Returning Defective Sub-Assemblies 1-42
Hardware Service Support Agreement 1-43
Working with the GRiD Resource Center 1-43
Calling the GRiD Resource Center 1-43
Returning Defective Units 1-43
Other GRiD Resource Center Services 1-44
Communications Loopback Tester 1-44
APPENDIX A: GRiDCASE 1500 Beep Codes 1-45
Appendix B: GRiDCASE 1500 Remocommended Spares List 1-48
Appendix C: Invalid Configuration Codes 1-50
Appendix D: 1500 Series ROM BIOS Error Messages 1-51
Appndix E: BIOS ROM Release Dates 1-52

LIST OF FIGURES AND TABLES

Figure 1-1. GRiDCASE 1500 Series Systems Rear Panel 1-10
Figure 1-2. MS-DOS Hierarchical Directory Structure 1-16
Table 1-1. GRiDCASE 1500 System Configurations 1-20
Figure 1-3. GRiDCASE 1520 Main Logic Board Block Diagram . . . 1-21
Figure 1-4. GRiDCASE 1530 Main Logic Board Block Diagram . . . 1-22
Table 1-2. DMA, IRQ, and TC Channel Difinitions 1-24
Table 1-3. GRiDCASE 1500 I/O Mapping 1-25
Figure 1-5. GRiDCASE 1500 Memory Allocation Map 1-26
Table 1-3. EMS I/O Ports and Their Windows 1-27
Figure 1-6. Sub-assembly Block Diagram of the GRiDCASE 1500 . . 1-28
Table 1-5. Common Floppy Interface Bus Pin-Out 1-36
Table 1-6. External Peripheral Interface Bus Pin-Out 1-37
Figure 1-7. Pocket Floppy Disk Drive Components 1-38
Figure 1-8. Pouch Tape Drive Components 1-39
Figure 1-9. Pouch Floppy Disk Drive Components 1-40

ABOUT THIS BOOK

This book supplies reference material for students taking the GRiDCASE 1500 Hardware Service Course. It supplies information on system operation and information relating to the formation of a repair facility.

INTENDED AUDIENCE

Students of the GRiDCASE 1500 Hardware Service Course. Readers of the manual are expected to have at least a two year electronics degree in digital electronics or equivalent experience.

DOCUMENTATION CONVENTIONS

This manual uses several terms to differentiate various sections of text. The following five topics define these terms.

Chapter

This manual contains 3 chapters. Each chapter starts on a new page.

Section

Each chapter consists of several sections. A section starts with a bar across the page, a capitalized section title outdented five characters, and a blank line.

Topic

Sections may contain one or more topics. A topic starts with a mixed-case topic name outdented five followed by a blank line.

Subtopic

Topics may contain one or more subtopics. A subtopic starts with a mixed-case subtopic name in line with the body of the text, followed by a blank line.

Sub-Subtopic

Subtopics may contain one or more sub-subtopics. A sub-subtopic starts with a mixed case sub-subtopic name in line with the body of the text. Two spaces follow, then the first line of text.

SYNTAX AND TERMINOLOGY

This section describes the syntax used to document commands, and some of the technical terms used in this manual.

Command Syntax

Filename All MS-DOS built-in commands and files will be shown in italics throughout the text.

Technical Terms

Application ROM: *An application ROM is a Read Only Memory chip containing applications software for the system. Application ROMs are used in the GRiD products to reduce the weight and power consumption.*

BIOS: *BIOS stands for Basic Input/Output System. It consists of a number of sub-routines used by the system to perform standard I/O fuctions — such as keyboard interrupt servicing. The ROM BIOS and the initialization/boot program are located together in the boot/BIOS ROMs.*

MS-DOS: *MS-DOS is an operating system developed for systems based on the 8086 family of processors.*

OTHER BOOKS YOU MAY NEED

You may need to refer to the following books as you use this manual:

- GRiDCASE 1500 Owner's Guide GRiD PN# 001500-40
- GRiDCASE 1500 Technical Reference GRiD PN# 001500-50
- MS-DOS Reference for GRiDCASE Users GRiD PN# 029550-00

PART ONE: REPAIRING THE GRIDCASE 1500 SERIES SYSTEMS

This chapter consists of reference material on the theory of operation, diagnostics, and repair of the GRiDCASE 1520 and GRiDCASE 1530 systems.

INTRODUCTION TO THE SYSTEM

This section presents a user's view of the GRiDCASE 1500 series systems. The purpose of the section is to make you aware of how the GRiDCASE 1500 series systems respond when they are in operational condition. Both the GRiDCASE 1520 and GRiDCASE 1530 are IBM AT compatible. The GRiDCASE 1520 uses the 16-bit 80C286 microprocessor, and the GRiDCASE 1530 uses the 32-bit 80C386 microprocessor. From the user's point of view, the two units function the same.

External Overview

From the external, physical viewpoint the two units are identical. They are made with identical black, magnesium casings, use the same keyboard (a GRiD proprietary, IBM-compatible, 72-key keyboard), and share the same screen technologies. (Both units can have either LCD or Plasma displays with 640 by 400 pixel resolution, or a smaller plasma display with 640 by 200 pixel resolution.)

NOTE: *Some older units may have 71-key keyboards.*

The primary connections for the GRiDCASE 1500 systems are located on the rear panel of the units. These connections are as follows:

- RGB Output (for external RGB monitors).
- GRiD Field Repair Course Outline
- External keyboard (AT-compatible keyboards only).

- Two parallel-wired RJ-11 phone line connections (for the internal modem).
- Serial Port (RS-232, 9-pin, AT-compatible connector).
- Centronics parallel port.
- External drive connector (for the Pocket/Pouch peripherals).
- DC input connector (for +16 VDC external power).

Figure 1-1 Shows these primary connections on the GRiDCASE 1500 rear panel.

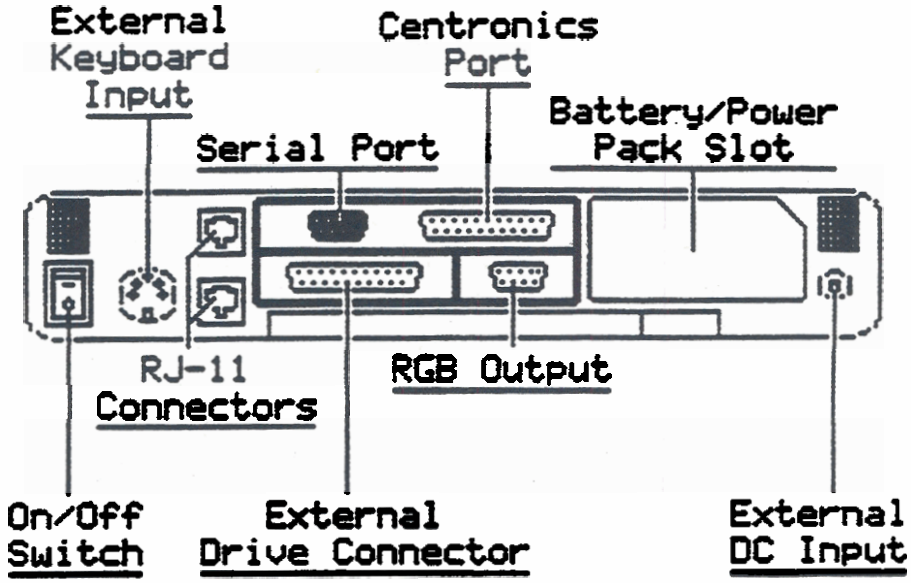

Figure 1-1 GRiDCASE 1500 Series Systems Rear Panel

System Hook-Up/Turning on the system

Here are a few rules to follow when hooking-up the GRiDCASE 1500 series systems:

1. **CAUTION:** Do not connect or disconnect devices or cables from the computer with the system power on.

2. **CAUTION:** Do not turn the system power off while the hard disk drive activity light is lit. Wait for the activity light to go off; this allows the hard disk drive to park the read/write heads, preventing damage to the drive while the system is being powered down and during transportation.

Setting up the GRiDCASE 1500 Systems

What attachments do you need to test the GRiDCASE 1500 systems? To fully test the systems, the following equipment is needed:

- GRiD Field Repair Course Outline
- Phoneline
- External keyboard
- Pocket or pouch floppy disk drive
- Battery pack
- External power supply
- AT-compatible serial loopback
- Centronix loopback
- Centronics printer
- RGB monitor

SOFTWARE THEORY

This section covers the operation of the GRiDCASE 1500 systems from the viewpoint of software. The system BIOS and the MS-DOS operating systems are discussed.

ROM BIOS

The Basic Input/Output System (BIOS) is a series of commonly used software sub-routines or calls written into the GRiDCASE 1500 boot ROMs. Because the BIOS has been written into ROM, it is commonly called ROM BIOS. The function of the BIOS is to allow software to perform basic system functions without having to manipulate the hardware directly. Because of this, the user's software doesn't require that these routines be built into it, thus saving space and making the software more hardware-independent. Think of the BIOS as a buffer between the hardware and applications software. This is how many of the IBM AT compatible systems are able to directly run MS-DOS. The BIOS used in the GRiDCASE 1500 systems was developed by Phoenix Compatibility Corporation and is fully compatible with the IBM AT BIOS.

The boot ROMs also contain the Power-On-Self-Test (POST). The POST is used to test the most critical functions required to operate the system. The POST is discussed in more detail in the section Initialization Sequence later in this chapter.

Operating Systems

The BIOS was not designed to interact with a user; it can only be accessed with machine code, and hardware interrupts, and does not provide for keyboard or console input. Software must be loaded from the mass storage devices to provide user accessability to the system. As part of the POST, the available storage devices are scanned for a valid bootstrap program to load the software from one of the storage devices. The bootstrap program is loaded and run, and in turn loads a main program from the disk. In almost all cases, the main program being loaded is an operating system.

An operating system is a program which provides a usable interface between the software user, the user's software applications, and the BIOS and hardware. It typically consists of at least three functional blocks: the user interface, the file control system, and a system resource manager. The user interface deals with how information is presented to the user, and how commands or information can be entered by the user. The file control system deals with the writing and reading of data to and from the storage devices, and the organization of data and files on the storage devices. The system resource manager controls memory allocation, CPU time allocation, and general system functions, such as maintaining time and date, and monitoring system status.

The MS-DOS Operating System

The MS-DOS operating system is typically used by most of the IBM PC compatible systems on the market today. It is a character-based, single-tasking, command-line oriented system. Its function is entirely dependent upon the ROM BIOS for its interface into the hardware of the system. As a result, MS-DOS is extremely transportable between IBM PC and AT compatible systems. Upon system boot, the following sequence of events takes place:

- The POST initializes and tests the system and displays the Phoenix ROM BIOS prompt as follows:

  Phoenix ROM BIOS Ver XXX, 06/08/87

  The POST tests the system configuration, beeps to indicate that all testing is complete, and begins scanning the storage devices for a valid bootstrap to load and execute an operating system.

- In a normal, uninterrupted boot, the BIOS scans the storage devices in the following order: the application ROMs, hard disk, internal floppy drive, and external floppy drive. Once a valid bootstrap is found on a storage device, it is loaded and executed. The bootstrap pulls in the operating system located on the storage device from whence it came – in this example, MS-DOS.

- The storage device scanning sequence can be interrupted by pressing the E, F, or H keys immediatly after the POST beeps to indicate that all testing is complete. Pressing the F key limits the search for a bootstrap to just the internal floppy disk drive; E to the external pouch or pocket floppy drive, H to the internal hard drive.

  Once the bootstrap is loaded and executed, it loads IO.SYS and MSDOS.SYS from the boot device into the lower 64 KB of RAM. The system indicates that this has occurred with the prompt:

  GRiD Systems Corp. MS-DOS BIOS Ver X XX/XX/XX
  Copyright (C) 1985,86,87 GRiD Systems Corporation

MSDOS.SYS takes over execution, loads the files listed in the system file CONFIG.SYS, a text file which lists optional device drivers such as RAMDRIVE.SYS, ANSI.SYS, and NUMPAD.SYS. Then MSDOS.SYS loads in the file COMMAND.COM, a command interpreter and dispatcher, which takes over command of the system from MSDOS.SYS.

- COMMAND.COM's first operation is to execute the batch file AUTOEXEC.BAT, if it exists on the storage device. If the AUTOEXEC.BAT file is not found, MS-DOS prompts the user with for the date and time, followed by the Microsoft copyright message:

```
Microsoft(R) MS-DOS(R)  Version XXX
(C)Copyright Microsoft Corp 1981-1986

A>
```

NOTE: A special exception to this exists. Application ROMs are usually given the MS-DOS boot device designation A which is also the MS-DOS designation of the first floppy disk drive of the system. Consequently, if a disk is in the floppy drive while the ROM-based MS-DOS is loading, the *AUTOEXEC.BAT* file on the disk is run.)

The MS-DOS User Interface

The MS-DOS user interface is character-based (versus graphics-based), and the dialog between the user and the system takes place via the command-line (versus a form or menu-based interface) in a style reminiscent of terminal operation. A typical dialog between an operator and the system might be as follows: MS-DOS begins execution in the system at boot, and prompts the user with the default command line prompt, as follows:

```
A>
```

At this prompt, the user types in the application program or built-in MS-DOS command he wishes to run and presses the RETURN key to begin execution of the command. MS-DOS then loads the program into RAM (if an application program is to be executed) and transferes control of the system to the application program or built-in command. When the application program or built-in command is ended, control is transfered back to MS-DOS, which returns to the command line prompt. What follows is a description of the critical elements of the MS-DOS operating system.

Storage Devices

In a multiple storage device system, some method must be used to distinguish one storage device from another. In MS-DOS, this distinction is made by assigning each of the storage devices a sequential letter (A,B,C,D,E..); performed by MS-DOS when it is initially loaded. Typically, MS-DOS assigns the floppy drives first — starting with the letter A, and the hard drives next — starting with the letter C. In the example used in the previous topic, A was the default drive prompt. This indicated that unless otherwise specified, MS-DOS was prepared to retrieve and execute files located only on the A drive. The default drive can be changed by the user to another drive by entering the desired default drive letter onto the command line followed by a colon character (":") as follows:

A>C: ("C:" is what you would enter.)

C> (This is the new prompt.)

In the GRiDCASE 1500, the upper, internal floppy drive is typically designated as the A drive.

Built-In Commands

MS-DOS has a number of built in commands that can be used by the operator to perform common functions. Some typical commands are as follows:

TIME *Allows the user to set the time in the system's real time clock.*
DATE *Allows the user to set the date in the system's real time clock.*
DIR *Displays the files located on the current storage device's directory.*
COPY *Copies one file to another*
DEL *Deletes a file*
MKDIR *Makes a sub-directory*
CHDIR *Change the default directory to the specified directory on the storage device.*

When these commands are entered onto the command line, the command is executed.

The Directory and Sub-Directories

The directory command DIR displays the files located on the main or root directory of the current storage device. For purposes of organization, it is often practical to divide the storage space of the storage device into smaller, more easily handled sections called sub-directories. Sub-directory names can be up to eight characters in length and can consist of letters, numbers, and some of the other ASCII characters. Under MS-DOS it is also possible to have sub-directories within sub-directories. The practical limitation to the number of levels of sub-directories available in MS-DOS is three or four, although it is possible to have more sub-directory levels than this. Illustration 1-2 shows the hierarchical structure of directories in a MS-DOS storage device.

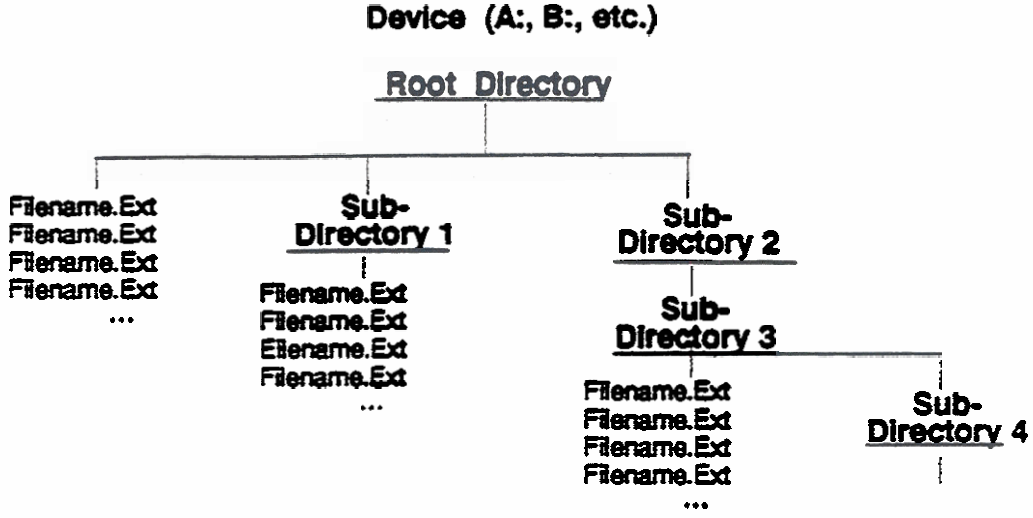

Figure 1-2. MS-DOS Hierachial Directory Structure

To change from one directory to another, the built-in command CHDIR is used along with the name of the desired sub-directory. Once in the new directory, MS-DOS only operates on those files within that directory unless an alternative directory is specified in the command line. More information on sub-directories and the commands which affect sub-directories can be found in the MS-DOS Reference (GRiD P/N 29550-46).

Files and Filenames

MS-DOS stores programs and data onto the storage devices in files. A file is accesses via its filename and its optional three letter extension. The filename can be up to eight characters in length and can consist of letters, numbers, and some of the other ASCII characters. The three letter extension following the filename has similar restraints, however some differences apply. Files with the three-letter extensions .EXE, .COM, or .BAT, are automatically executed by MS-DOS. Files with the .EXE or .COM extension are generally user application programs. Files with the .BAT extension are of a special type of text file called a batch file, discussed under the topic Batch Files later in this section. To execute a program or run a batch file, enter the filename on the command line as follows. Notice that the file's three letter extension need not be entered, MS-DOS automatically loads the version of the file with the .EXE, .COM, or BAT extension.

```
CD > D:\Sub1\Filename
```

Where D: is the MS-DOS designation for the storage device (A,B,C,D,etc.), Sub1 is the sub-directory in which the file is located (this is not necessary if the file is within the current directory), and filename is the name of the file to be executed (one to eight characters in length).

NOTE: If the file to be executed is on the current storage device, you do not have to preceed it with the storage device letter.)

Parameters

It is possible in MS-DOS to pass information to built-in commands or executable files through the command line by using parameters. A parameter can consist of standard, displayed characters, and otherwise, is only limited in content by the ability of the program to interpret it. Typically, a parameter is separated from the filename and any other parameters on the command line with either a SPACE or a slash character ("/").

Typical parameters include source filenames and their extensions, destination filenames and their extensions, source and destination devices, commands to the file to be executed, and numeric values. An example of a parameter follows.

C> PRNLOOP #L500 {Loops printer loop test 500 times }

Batch Files

A batch file can be written to accomplish redundant command line entry for the operator, or to perform tasks during system boot prior to operator use. An example of the former is the BURNIN.BAT used on the FIELDTEST Diagnostics to execute the files necessary to fully test the GRiDCASE system, while an example of the latter is the file AUTOEXEC.BAT. A batch file is a text file ending with the extension .BAT. To run a batch file, enter it in the command line as you would any other executable file. COMMAND.COM interprets the batch file as a series of commands; each line interpreted as one command.

If the batch file AUTOEXEC.BAT is on the booting storage device, MS-DOS executes it automatically prior to the point where the operator is prompted with the command in the normal MS-DOS boot-up sequence. To avoid the execution of the AUTOEXEC.BAT file, press CTRL-C (displayed as ^C) several times immediately following the first MS-DOS prompt:

GRiD Systems Corp. MS-DOS BIOS Ver X XX/XX/XX
Copyright (C) 1985,86,87 GRiD Systems Corporation

You can create a batch file using the MS-DOS built-in command *COPY*. For instance, the following command creates the file *TEST.BAT:*

```
A>COPY CON: TEST.BAT
MODEMTST/SA
PRNLOOP #L100
TYPE MESSAGE.TXT
^Z
```

This takes entry from the keyboard andstores it into the file TEST.BAT. Just type into the keyboard the commands you want the system to run for you. When you are done entering the batch file. Type CTRL-Z (entered as "^Z") to end keyboard input, and then press the RETURN key to save the file to disk.

HARDWARE THEORY OF OPERATION

The GRiDCASE 1500 series systems were designed to be IBM AT compatible. Consequently, the system architecture, processors, port configuration, and ROM BIOS are based on the IBM AT. Architectural compatibility allows the GRiDCASE 1500 series systems to run IBM AT software: the GRiDCASE 1520 runs MS-DOS, and the GRiDCASE 1530 runs either MS-DOS or XENIX. Due to size and power limitations, the systems' design has required many power- and space-saving measures. Examples of these measures are as follows:

- The compact 72-key keyboard, while it does not have all the same keys as the IBM's, does share the IBM keyboard's function. Using multiple-key keystrokes, a user can duplicate any keystroke the IBM AT keyboard generates.

- The application ROM slots, which are particular to the GRiD systems, allow commonly used software to be stored on a denser, more permanent media than a disk drive. This option has been designed such that it does not interfere with the normal IBM AT function, and thus does not interfere with software designed to run on the IBM AT. The two application ROM slots can contain either 128KB EPROMs (32-pin) or 128KB Masked ROMs (28-pin).

- Much of the GRiDCASE 1500 series system's functionality is built into CMOS gate array/VLSI technology for power- and space-saving. The GRiDCASE 1500 series systems' basic IBM AT architecture is supported by a four VLSI gate array chip set. The function of the printer port, a standard Centronics interface, is contained in a GRiD-customized gate array. I/O address decoding logic, floppy select logic, and memory management logic also utilize customized programmable logic devices.

System Options

The GRiDCASE 1500 series systems support a number of different drive, display, modem, and memory options. Table 1-2 below illustrates several options available for the GRiDCASE 1500 systems, and their requirements.

OPTION	REQUIREMENTS
RAM Options:	
1MB RAM	4-256KB RAMstick
2MB RAM	8-256KB RAMsticks
4MB RAM	4-1MB RAMsticks
8MB RAM	8-1MB RAMsticks
Display Options:	
EL backlit, 640 X 400 Transflective LCD Display	LCD DC/DC converter
EL backlit, 640 X 400, Transmissive LCD Display	LCD DC/DC converter
Plasma 640 X 400 display	Plasma DC/DC converter
Plasma 640 X 200 Display	Plasma DC/DC converter
Drive Options:	
Dual 1.44MB FDD	
1.44MB FDD/20MB HDD	
1.44MB FDD/40MB HDD	
40MB HDD	
100MB HDD	
Coprocessor Options:	
80287 NDP	1520 only
80387 NDP	1530 only

Table 1-1. GRiDCASE 1500 System Configurations.

Expanded and Extended Memory Specification RAM

The 80286 and 80386 processors have two modes of operation which affect their approach to memory access: real address mode, and virtual address mode. In real address mode, the processors can only address a maximum of 1MB of memory. In virtual address mode, the processors can access all of the RAM in the computers (up to 8MB in the 1500 systems). MS-DOS is limitted to functioning in real address mode, and is limitted to accessing a maximum of 640KB of RAM. By definition, this 640KB block of RAM is called System RAM. Similarly, the RAM above the 640KB block is called Additional RAM. The additional RAM is not accessable to the system in real address mode, and is located above the 1MB address boundary in the virtual address mode. Two approaches, Expanded Memory Specification and Extended Memory Specification, allow the systems to access the Additional RAM while under MS-DOS.

The Expanded Memory Specification requires specific I/O hardware registers and a free block of address space (between address E0000h and F0000h) in order to function, but can be implemented on 8088-, 8086-, 80286-, and 80386-based systems. The GRiDCASE 1520 can access up to 2 MB of RAM above the 1MB address boundary using the Expanded Memory Specification (any additional RAM in the GRiDCASE 1520 must be accessed with the Extended Memory Specification).

The Extended Memory Specification is strictly based in software, and operates only in 80286- or 80386-based systems. The Extended Memory Specification temporarily switches to the virtual address mode to exchange blocks of RAM between the system RAM and the additional RAM. Switching between the two addressing modes can take a substantial ammount of time. In the 1520, the Extended Memory Specification runs somewhat slower than the Expanded Memory Specification. In the 1530, advances in the virtual/real address mode selection capabilities of the 80386 have made the Extended Memory Specification's speed comparable to the Expanded Memory Specification's speed. The advantage of using the Extended Memory Specification over Expanded Memory Specification is that it allows the system to access all of the additional RAM (up to 7.38MB). The GRiDCASE 1530 only supports the Extended Memory Specification.

THE MAIN LOGIC BOARD: a Component Level Tour

What follows are block diagrams for the main logic boards of the GRiDCASE 1520 and 1530 systems.

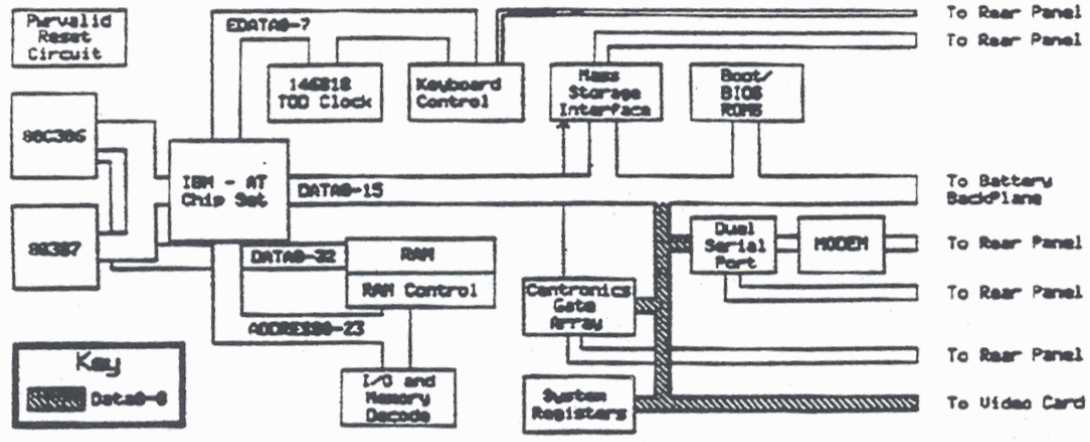

Figure 1-3. GRIDCASE 1520 Main Logic Board Block

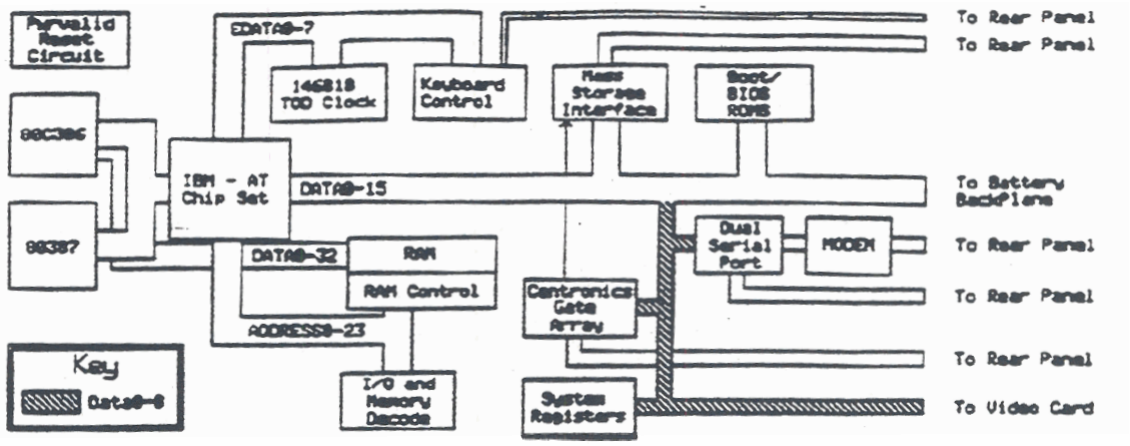

Figure 1-4. GRIDCASE 1530 Main Logic Board Block

Powervalid/Reset Circuit:

This circuit is required to perform a power-on initialization of the board. Its purpose is to insure that the power supply is at a nominal operating conditions before the reset signal is generated. It also monitors the power supply during operation in order to shut down the CPU should power drop. This keeps the CPU from executing randomly generated code and possibly trashing stored data on mass storage devices. The voltages monitored/used by the Powervalid/Reset Circuit are +12, and +5 volts. These two voltages are required for a minimal boot of the main logic board.

The Microprocessor (80C286 or 80C386)

The GRiDCASE 1520 uses the 80C286, a CMOS version of the 16-bit microprocessor used in the IBM AT. It has a 16-bit wide data bus and a 24-bit wide address bus. It is upwardly compatible with the 8086/8088 processor used in the IBM PC. The GRiDCASE 1530 uses the 80C386. It has a 32-bit wide data bus and a 32-bit wide address bus. In the GRiDCASE 1530, address lines 24 through 30 are not utilized. Upon a hardware or software reset, both processors load and execute the first instruction from memory address FFFF0h, located in the Boot ROMs. This code initializes the system and performs the POST. The POST is described in detail in the Section Initalization Sequence.

Boot/BIOS ROMs

The boot/BIOS ROMs are located at F0000h through FFFFFh in the GRiDCASE 1500 system memory map. (See the sub-topic Memory Mapping in the topic Decode Circuitry and System Registers below in this section.) After initialization, the system starts executing code at FFFF0h in the boot ROMs which begins the POST. The BIOS is discussed in the section Software Theory in this chapter.

IBM AT Chip Set

Four chips make-up the functionality of the IBM AT. The chips, and their functions are listed below.

FE 3000 CPU Controller

This chip provides wait state generation for the CPU, system clock generation, coprocessor interfacing, reset synchronization, and bus control.

FE 3010 Peripheral Control Logic

This chip contains the DMA, interrupt, timer, refresh, and speaker control. It possesses seven DMA channels (the equivalent of two 8237 DMA controllers), 15 interrupt channels (the equivalent of two 8259 Programmable Interrupt Controllers (PICs)), and three timer/counter channels (the equivalent of one 8254 timer/counter chip). It has been designed to be compatible with the components it replaces on the IBM AT main logic board. Table 1-3, below, illustrates the purposes of the DMA channels, Interrupt Request (IRQ) channels, and the timer (TC) channels used in the 3010.

Channel	Supported Device/Function
DMA 0	Spare (Highest Priority)
DMA 1	Reserved
DMA 2	Floppy Disk Drive Controller
DMA 3	Hard Disk Drive Controller
DMA 4	Cascade from "2nd 8237"
DMA 5-7	
Refresh	Connected to TC 1
IRQ 0	System tick (Connected to TC 0)
IRQ 1	Keyboard
IRQ 2	Cascade from "2nd PIC"
IRQ 8	Time of Day Clock
IRQ 9	Software redirected to INT 0Ah
IRQ 10	Reserved
IRQ 11	Reserved
IRQ 12	Reserved
IRQ 13	Math Coprocessor
IRQ 14	Hard Disk Controller
IRQ 15	Reserved
IRQ 3	RS-232 Serial Port (COM2)
IRQ 4	Modem Serial Port (COM1)
IRQ 5	Reserved
IRQ 6	Floppy Disk Drive Controller
IRQ 7	Centronics Interface
TC 0	Refresh timing
TC 1	Speaker tick
TC 2	Speaker output

Table 1-2. DMA, IRQ, and TC Channel Definitions

FE 3020 Address Buffer

This chip is used to buffer the address lines of the CPU, generate the system's memory read/write strobes, and to decode the memory address for the Boot/BIOS ROMs.

FE 3030 Data Buffer

This chip buffers the CPU's data bus, and generates two separate data buses DATA 0-15 (a 16-bit data bus) and EDATA 0-7 (an 8-bit data bus). I/O read and write strobes are also buffered by the chip.

Decode Circuitry and System Registers

The decode circuitry is used for I/O chip selection (I/O mapping), and RAM and ROM chip selection (memory mapping). The system registers, accessed through the I/O, control various GRiD specific functions throughout the system.

I/O Mapping

Table 1-4 illustrates the I/O map of the GRiDCASE 1500. I/O ports 0 through 3FFh are defined by the IBM AT standard. The I/O ports above 3FFh are options specific to GRiD.

I/O ADDRESS	DEVICE ACCESSED
000-01Fh	DMA control, channels 0-3
020-03Fh	Interrupt control, channels 0-7
040-05Fh	Timer/counter
060-063h	Keyboard control registers
080-09Fh	DMA page register
0A0-0BFh	Interrupt control, channels 8-15
0C0-0DFh	DMA control, channels 5-7
2F8-2FEh	COM2 (RS-232) serial interface
378-37Ah	Centronics gate array printer interface
3D0-3DCh	Video control
3F2-3F5h	Floppy drive 0
3F8-3FEh	COM1 (modem) serial interface
440h	Application ROM socket select

Table 1-3. GRiDCASE 1500 I/O Mapping

Memory Mapping

Memory mapping within the GRiDCASE 1520 and 1530 is similar to the IBM AT. The BOOT/BIOS ROMs located at F0000h through FFFFFh are in the same location as the IBM AT. The system RAM starts at address 00000h and can go up to address 9FFFFh (640K RAM). Additional RAM is located between 100000h and

7FFFFFh. A system register function, ROM enable, allows the memory address space between A0000h and BFFFFh to be overlayed with the application ROMs. The memory space between B8000h and BC000h is used for access video RAM. Please note that access to the video RAM is exclusive of access to the application ROMs. Addresses C0000h through DFFFFh are available for user expansion card ROMs. The space from E0000h and EFFFFh is used as an access into EMS RAM. Figure 1-6 illustrates the GRiDCASE 1500 memory map.

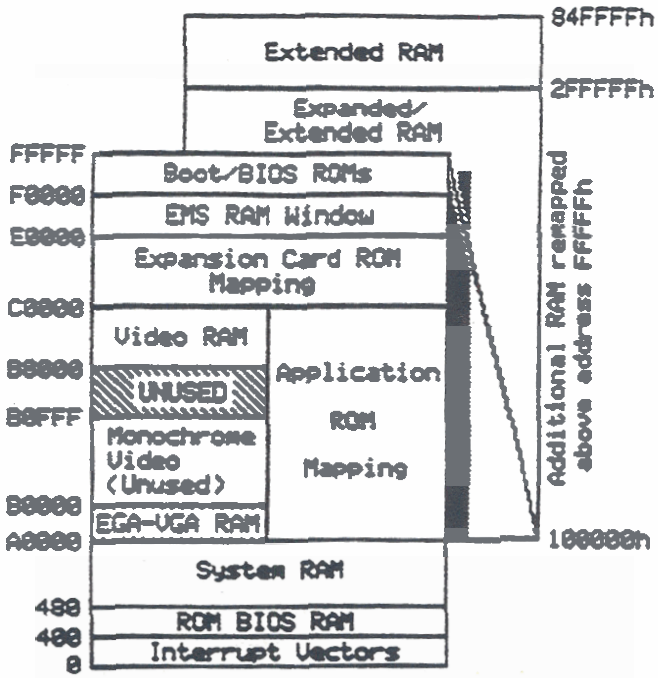

Figure 1-5. GRiDCASE 1500 Memory Allocation Map

System Registers

The system registers are used by the GRiDCASE 1500 systems to control options that are beyond the IBM AT standard. These options include the applications ROM control, speed selection, and controls on COM1 (Modem) and COM2 (RS-232). System register 0 exists in the I/O space from FF8h to FFFh and controls RAM configurations when written to, and returns configuration information when read from. System register 1 exists in the I/O space from 410h to 417h and controls CPU clock speed. System register 2 exists in the I/O space from 7F8-7FFh and controls display, font, and application ROM size selection. System register 3 exists in the I/O space from 6F8-6FFh. System register 4 exists in the I/O space from 420-427h. Further information on these registers can be found in the GRiDCASE 1500 Technical Reference.

RAM and RAM Control

RAM in the GRiDCASE 1500 systems must consist of exclusively 256KB RAMsticks or exclusively 1MB RAMsticks; the two types of RAMsticks cannot be mixed in one system. The GRiDCASE 1520 requires one of two RAM controllers (one for 256KB RAMsticks and one for 1MB RAMsticks) to access RAM. The GRiDCASE 1530's RAM controller can be switched between the two different RAMstick sizes by firmware. The RAM controller generates the necessary chip selects to each of the RAMsticks, multiplexes the system's address bus into the RAMsticks, and assists the refresh cycle. Another part of the RAM controllers' function is to offset the addresses of the RAM above the 640KB system RAM boundary upward by 384K. This places all of the additional RAM (Extended and EMS RAM) above address 100000h (1MB).

Expanded Memory Specification Control (1520 only)

In the 1520, Expanded Memory Specification has been built into the main logic board. Logically, the EMS control circuitry is located between the address bus and the RAM control. When the system attempts to access the memory addressing between addresses E0000h and EFFFFh, the EMS control circuitry redirects memory addressing to the RAM between addresses 100000h and 300000h. The EMS control circuitry removes the six most significant bits of the 20-bit system address, and replaces them with a seven-bit value which has been stored in one of four I/O registers. This process creates a 21-bit address, which is used to access the additional RAM above the 1MB address boundary. Each I/O register corresponds to one quarter of the E0000h to EFFFFh EMS window. Table 1-5 lists the four I/O ports, and the corresponding blocks of the EMS window they control.

I/O ADDRESS	EMS WINDOW
0258h	E0000-E3FFFh
4258h	E4000-E7FFFh
8258h	E8000-EBFFFh
C258h	EC000-EFFFh

Table 1-4. EMS I/O Ports and Their Windows

Keyboard Controller (87C41)

The keyboard controller operates independently of the system, and can be thought of as a separate circuit unto itself. The chip is a non-erasable, programmable 8-bit microcomputer on a chip with I/O capability. It accepts input from either the matrix of the internal keyboard or serial data from the external IBM AT compatible keyboard or keypad.

72065 Floppy Controller

The 72065 is the equivalent of the 8272 floppy drive controller. This chip handles blocks of data from either the internal disk drive or the pocket floppy. The microprocessor sends commands to the floppy controller on the I/O bus. drives. The controller supplies serial write data, timing, and command signals to the drives, and receives serial read data and status lines back. Inside of the 72065, the read serial data is converted to parallel. Then the floppy controller sends the floppy data directly to memory via the DMAController, one byte at a time. When the controller writes to the drive, this process is done somewhat in reverse: data is sent from memory to the controller via DMA, in the controller the data is converted to serial form, and then written to the drive. The GRiDCASE 1500 systems uses several support chips in conjunction with the 72065 drive controller. The data separator chip (9239) is used to separate the serial data and data clock from the read signal of the drive. The data separator has selectable high density and double density modes, as well as precompensation control. This allows the varied pouch peripherals to operate from the pocket/pouch peripheral port. Other support circuitry, such as a custom programmable logic device, generate the drive select and motor enable controls for up to two internal 1.4MB floppy disk drives, and any one of the pouch peripherals.

Centronics Gate Array (LPGA)

The Centronics gate array contains the Centronics port circuitry, and pocket/pouch peripheral sense circuitry. This chip was originally developed by GRiD for use in the GRiDLite systems. It is accessed through I/O ports 378-37Ah. The gate array provides full compatibility with the IBM AT's Centronics port.

COM1 and COM2 Serial Ports

The GRiDCASE 1500 systems possess two asynchronous serial communications ports: COM1, and COM2. COM1 is dedicated to the internal modem, and COM2 is dedicated to the RS-232 port. In the GRiDCASE 1520, COM1 GRiD Field Repair Course Outline and COM2 consist of two 82C50 UARTs. In the GRiDCASE 1530, a VLSI package contains both 8250-compatible communications ports.

146818 Time of Day Clock Chip

The 146818 is a CMOS device consisting of 14 clock registers (used to access and control the time of day information), and 50 general purpose storage registers (used by the system to store configuration information). Typically, the system accesses this chip only during system boot. It has its own 32.8 KHz crystal oscillator, and its own 3.6V lithium battery to maintain the correct time and to save the data in the general purpose registers while the system power is off.

INITIALIZATION SEQUENCE

After Reset, Power-On or Keyboard reset (when CTRL-ALT-DEL is pressed), the CPU begins execution at memory address FFFF0h and following actions are taken: 4The BIOS does some initializations and checks of system. The checks make up the Power-On-Self-Test (POST). Should a failure occur during the POST, the CPU goes into a HALT state, freezing further system operation. The initializations and checks the POST performs are listed below.

- Check time of day chip registers-Initialize/Test Programmable Interval Timer function
- Initialize/Test DMA Control
- Check first 1K of Memory
- Initialize/Test programmable interrupt control
- Check RS232 port (8250)
- Check Centronics Port
- Test horizontal/vertical retrace modes of the video circuitry

- Print the sign-on message to screen:

  Phoenix 80X86 ROM BIOS Version XXX
  Copyright (c) 1985,1986 Phoenix Technologies Ltd
  All Rights Reserved
  GRID Systems Corporation XX/XX/XX

- Check size of memory (This only occurs after a hardware reset of the system.)

- Beep to indicate completion of POST

NOTE: The message "Phoenix ROM BIOS ....." followed by a beep indicates that all checks of system are ok. If a failure occurs during the POST, a rapid series of beeps are sent to the speaker. The beeps correspond to a code indicating the mode of failure. See Appendix A of this manual for a listing of the POST's beep codes.

- Test keyboard controller (If an error occurs, the message keyboard bad, or keyboard stuck failure is displayed.)

The system then attempts to load an operating system's bootstrap from a storage device and transfers control to the bootstrap program.

Boot Sequence

The system scans devices in the following order searching for a valid operating system bootstrap.

- Application ROMs
- Internal hard disk drive
- Internal floppy disk drive
- Pocket/pouch floppy disk drive

Pressing and holding F (Int Floppy), H (External Hard Disk), E (External Floppy), or R (Application ROMs) at reset, overrides the above order and attempt a boot from the selected device.

An error occuring at this point either hangs the system or gives an error message (i.e.; Floppy Disk Boot Error).

GRIDCASE 1500: SUB-ASSEMBLY DESCRIPTIONS

What follows is the block diagram of the GRiDCASE 1500 series systems' sub-assemblies.

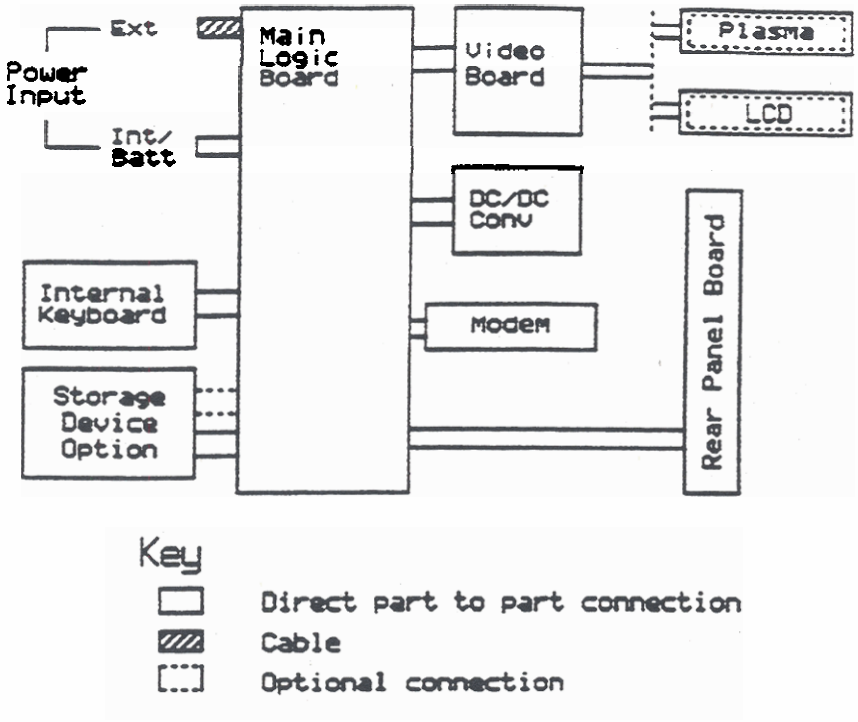

Figure 1-6. Subassembly Block Diagram of GRiDCASE 1500

GRiDCASE 1500 Series System Main Logic Boards: The main logic boards of the 1520 and 1530 are the heart of their respective systems in that 90% of the system activity occurs on these boards. The two boards are very similar in construction. Both use the Faraday chip set to provide a majority of the electronics necessary to produce an AT-compatible system. The boards share the same footprint and connector layout in order to provide upgrade capability. Each board can contain 1 or 2MB of RAM in 256KB RAMsticks, or 4 or 8MB of RAM in 1MB RAMsticks.

The difference between the two boards is the type of processor (80C286 or 80386), the width of the data bus (16-bit or 32-bit), and the numeric data processor (80287 or 80387) that is used in each. The 1520 main logic board supports an 80C286 microprocessor, a 16-bit data bus, and an 80287 numeric data processor. The 1530 main logic board supports an 80C386 microprocessor, a 32-bit data bus, and an 80387 numeric data processor.

Material Withdrawal Form - 1500

DATE _____ NAME _____

CC# _____ ACCOUNT# _____ PRO# _____ MODEL# _____

☐ LG PLASMA (HI-PWR) 600X400	103913-00
☐ LG PLASMA (LO-PWR) 600X400	105734-00
☐ PLASMA (ASSY)	104778-00
☐ SM PLASMA 600X200	101483-00
☐ YELLOW LCD	104292-00
☐ YELLOW LCD (ASSY)	104777-00
☐ BLUE LCD	104632-00
☐ BLUE LCD (ASSY)	104775-00
☐ DC/DC (LCD-115)	104144-00
☐ DC/DC (PLASMA-116)	104145-00
☐ 10MB HD CONTROLLE 1A	104140-00
☐ 20MB HD CONTROLLER 2A, 2B	104141-00
☐ 40MB CONNER BACKPLANE	104380-00
☐ 40MB CONNER B/P W/WIRE	105970-00
☐ 20MB CONNER BACKPLANE	104941-01
☐ DUAL FLOPPY BACKPLANE	104193-00
☐ FLOPPY DRIVE 2MB	250145-00
☐ 10MB JVC HD-JD3812	250169-00
☐ 20MB JVC HD-JD3824	250171-00
☐ 40MB 1/2 HT, CONNER HD	250195-00
☐ 100MB CONNER HD	250183-00
☐ 20MB CONNER HD	250194-00
☐ REAR PANEL BOARD	104128-01
☐ REAR PANEL ASSY	104569-00
☐ 2400 BAUD MODEM	104243-00
☐ MNP 2400 BAUD MODEM	105858-00
☐ 1200 BAUD MODEM	104300-00
☐ 1MB RAM STI CKS	300804-00
☐ 1MB RAM STICKS (THIN)	300873-00
☐ 256K RAM STICKS	300701-00

☐ KEYBOARD 71-KEY	103163-00
☐ KEYBOARD 72-KEY	104029-00
☐ VIDEO ROM BOARD	104056-01
☐ L/B-1520 RAM ____MB	104014-01
☐ L/B-1520 RAM ____MB	105351-01
☐ L/B-1530 RAM ____MB	104078-00
☐ L/B-1530 MASON BOARD	106160-00
☐ BACKPLANE-EXP	105359-00
☐ BACKPLANE-EXP (1/2 HI)	105950-00
☐ EXP UPPER INTERFACE BD	104425-00
☐ DC CONVERTER-EXP	104628-00
☐ EXP INTERFACE BD	104431-00
☐ FAN-EXP	105117-00
☐ 80287 CO-PROCESSOR	300414-00
☐ 80387 CO-PROCESSOR	300688-00
☐ 20 MEG (STACK)	105267-00
☐ 40 MEG (STACK)	105530-00
☐ BROWN-60 WATT	105487-00
☐ SILVER BULLET	105572-00

VGA

☐ DC/DC	105759-00
☐ VIDEO BD	105960-00
☐ DISPLAY ASSY	106202-00
☐ VGA MANUAL	106857-00
☐ REAR PANEL ASSY	105987-00

New Display 106769-00

August, 1990

1500 SERIES

_____ DATE: _____

PLASMA INTENSITY SW.(P/N 104911-00)

FEET(P/N 100119-00)

BATTERY LATCH(P/N 102135-00)

BATTERY EJECT BUTTON(P/N 101331-00)

BATTERY BACKPLANE(P/N 104170-000

ROM COVER(P/N 104072-00)

RIGHT LEG(P/N 104119-00)

LEFT LEG(P/N 104159-00)

HANDLE ASSEMBLY(P/N 104120-00)

MYLAR FOR BASE MAG(P/N 104161-00)

DUAL FLOPPY BRACKET RT(P/N 104233-00)

DUAL FLOPPY BRACKET LT(P/N 104234-00)

LEFT SLIDER SWITCH(P/N 104202-00)

PLASMA DUMMY SWITCH(P/N 104203-00)

BATTERY TRAY (P/N 104204-00)

DISPLAY CABLE-PLASMA(P/N 104222-00)

DISPLAY CABLE-LCD(P/N 104223-00)

RT HINGE EAR(P/N 105968-00)

LT HINGE EAR (P/N 102326-00)

BRACKET FOR 40MB HD(P/N 104331-00)

PLASMA SLIDER SWITCH(P/N 104349-00)

BEZEL FOR JVC(P/N 104411-00)

CABLE L/B-INTERFACE BD(1535)(P/N 104462-00)

DC JACK(P/N 104492-00)

TOP SHIELD FOR CONNER(P/N 104512-00)

CONTRAST BD.-LCD(P/N 104530-00)

BACKLITE BD.-LCD(P/N 104536-00)

LATCH BD.(P/N 104633-00)

20MB DRIVE COVER(P/N 104712-00)

____ JVC CABLE(P/N 104722-00)

____ CONNER BRKT-LT(P/N 104930-00

____ CONNER BRKT-RT(P/N 104929-00)

____ INSULATOR 20MB BKPLANE(P/N 105080-00)

____ BOTTOM SHIELD CONNER(P/N 105118-00)

____ INSULATOR 40MB BKPLANE(P/N 105396-00)

____ SPRING BATTERY TRAY(P/N 280081-00)

____ INSULATOR BATTERY HOUSING(P/N 104499-0

____ BASEMAG W/BEZEL(P/N 104957-00)

____ TOP COVER W/BEZEL(P/N 104954-00)

____ BASEMAG NO BEZEL(P/N 104164-000

105[illegible]

____ TOP COVER NO BEZEL(P/N 104168-00)

____ REAR PANEL MAG(P/N 104157-00)

____ DISPLAY HOUSING(P/N 101714-00)

____ KEYBOARD FRAME(P/N 104071-00)

____ DISPLAY FRAME(LCD)(P/N 104478-00)

____ DISPLAY FRAME(PLASMA)(P/N 104201-00)

____ BASE PAN-EXP(P/N 104456-00)

____ COVER GASCKET-BLK-EXP(P/N 104458-00)

____ INSULATOR BATTERY HOUSING(P/N 102264-0

____ SMALL FAN-EXP(P/N 104208-00)

____ MOUNTING BRACKET-EXP(P/N 103789-00)

____ PC BD BRACKET-EXP(P/N 104455-00)

____ U-SHAPED INSULATOR-EXP(P/N 105323-00)

____ PLASTIC COVER GASCKET-EXP(P/N 104458-0

____ BOTTOM TRAY-EXP(P/N 104457-00)

____ PWR CONTROL CABLE-EXP(P/N 104462-00)

____ DC JACK-EXP(P/N 105132-00)

DAILY PICK LIST 000010-00 PARTS
1500 SERIES

NAME: _____ DATE: _____

==========

PLASMA INTENSITY SW.(P/N 104911-00)

___ FEET(P/N 100119-00)

___ BATTERY LATCH(P/N 102135-00)

___ BATTERY EJECT BUTTON(P/N 101331-00)

___ BATTERY BACKPLANE(P/N 104170-000

___ ROM COVER(P/N 104072-00)

___ RIGHT LEG(P/N 104119-00)

___ LEFT LEG(P/N 104159-00)

___ HANDLE ASSEMBLY(P/N 104120-00)

___ MYLAR FOR BASE MAG(P/N 104161-00)

___ DUAL FLOPPY BRACKET RT(P/N 104233-00)

___ DUAL FLOPPY BRACKET LT(P/N 104234-00)

LEFT SLIDER SWITCH(P/N 104202-00)

___ PLASMA DUMMY SWITCH(P/N 104203-00)

___ BATTERY TRAY (P/N 104204-00)

___ DISPLAY CABLE-PLASMA(P/N 104222-00)

___ DISPLAY CABLE-LCD(P/N 104223-00)

___ RT HINGE EAR(P/N 105968-00)
LT HINGE EAR (P/N 102326-00)

___ BRACKET FOR 40MB HD(P/N 104331-00)

___ PLASMA SLIDER SWITCH(P/N 104349-00)

___ BEZEL FOR JVC(P/N 104411-00)

___ CABLE L/B-INTERFACE BD(1535)(P/N 104462-00)

___ DC JACK(P/N 104492-00)

___ TOP SHIELD FOR CONNER(P/N 104512-00)

___ CONTRAST BD.-LCD(P/N 104530-00)

BACKLITE BD.-LCD(P/N 104536-00)

___ PATCH BD.(P/N 104600-00)

___ 40MB DRIVE COVER(P/N 104712-00)

___ BACKPLANE HOLDER(P/N 105358-00)

___ JVC CABLE(P/N 104722-00)

___ CONNER BRKT-LT(P/N 104930-00

___ CONNER BRKT-RT(P/N 104929-00)

___ INSULATOR 20MB BKPLANE(P/N 105080-00

___ BOTTOM SHIELD CONNER(P/N 105118-00)

___ INSULATOR 40MB BKPLANE(P/N 105396-00

___ SPRING BATTERY TRAY(P/N 280081-00)

___ INSULATOR BATTERY HOUSING(P/N 102477-

___ BASEMAG W/BEZEL(P/N 104957-00)

___ TOP COVER W/BEZEL(P/N 104954-00)

___ BASEMAG NO BEZEL(P/N 104164-000
105637-02

___ TOP COVER NO BEZEL(P/N 104168-00)

___ REAR PANEL MAG(P/N 104157-00)

___ DISPLAY HOUSING(P/N 101714-00)

___ KEYBOARD FRAME(P/N 104071-00)

___ DISPLAY FRAME(LCD)(P/N 104478-00)

___ DISPLAY FRAME(PLASMA)(P/N 104201-00)

___ BASE PAN-EXP(P/N 104456-00)

___ COVER GASCKET-BLK-EXP(P/N 104458-00)

___ INSULATOR BATTERY HOUSING(P/N 102264-

___ SMALL FAN-EXP(P/N 104208-00)

___ MOUNTING BRACKET-EXP(P/N 103789-00)

___ PC BD BRACKET-EXP(P/N 104455-00)

___ U-SHAPED INSULATOR-EXP(P/N 105323-00)

___ PLASTIC COVER GASCKET-EXP(P/N 104458-

___ BOTTOM TRAY-EXP(P/N 104457-00)

___ PWR CONTROL CABLE-EXP(P/N 104462-00)

___ DC JACK-EXP(P/N 105132-00)

___ CONNER BRACKET(P/N 105373-00)

DAILY PICK LIST 500312-23 PARTS
1500 SERIES

NAME: _____ DATE: _____

PLASMA INTENSITY SW.(P/N 104911-00)	____ JVC CABLE(P/N 104702-00)
____ FEET(P/N 100119-00)	____ CONNER BRKT-LT(P/N 104930-00
____ BATTERY LATCH(P/N 102135-00)	____ CONNER BRKT-RT(P/N 104929-00)
____ BATTERY EJECT BUTTON(P/N 101331-00)	____ INSULATOR 20MB BKPLANE(P/N 105263-0
____ BATTERY BACKPLANE(P/N 104170-000	____ BOTTOM SHIELD CONNER(P/N 105118-00)
____ ROM COVER(P/N 104072-00)	____ INSULATOR 40MB BKPLANE(P/N 105396-0(
____ RIGHT LEG(P/N 104119-00)	____ SPRING BATTERY TRAY(P/N 280081-00)
____ LEFT LEG(P/N 104159-00)	____ INSULATOR BATTERY HOUSING(P/N 104499
____ HANDLE ASSEMBLY(P/N 104120-00)	____ BASEMAG W/BEZEL(P/N 104957-00)
____ MYLAR FOR BASE MAG(P/N 104161-00)	____ TOP COVER W/BEZEL(P/N 104954-00)
____ DUAL FLOPPY BRACKET RT(P/N 104233-00)	____ BASEMAG NO BEZEL(P/N 104164-000
____ DUAL FLOPPY BRACKET LT(P/N 104234-00)	105697-00 ____ TOP COVER NO BEZEL(P/N 104168-00)
____ LEFT SLIDER SWITCH(P/N 104202-00)	____ REAR PANEL MAG(P/N 104157-00)
____ PLASMA DUMMY SWITCH(P/N 104203-00)	____ DISPLAY HOUSING(P/N 101714-00)
____ BATTERY TRAY (P/N 104204-00)	____ KEYBOARD FRAME(P/N 104071-00)
____ DISPLAY CABLE-PLASMA(P/N 104222-00)	____ DISPLAY FRAME(LCD)(P/N 104478-00)
____ DISPLAY CABLE-LCD(P/N 104223-00)	____ DISPLAY FRAME(PLASMA)(P/N 104201-00)
____ RT HINGE EAR(P/N 105968-00)	____ BASE PAN-EXP(P/N 104456-00)
LT HINGE EAR (P/N 102326-00) ____ BRACKET FOR 40MB HD(P/N 104331-00)	____ COVER GASCKET-BLK-EXP(P/N 104458-00)
____ PLASMA SLIDER SWITCH(P/N 104349-00)	____ INSULATOR BATTERY HOUSING(P/N 102264-
____ BEZEL FOR JVC(P/N 104411-00)	____ SMALL FAN-EXP(P/N 104238-00)
____ CABLE L/B-INTERFACE BD(1535)(P/N 104462-00)	____ MOUNTING BRACKET-EXP(P/N 103789-00)
____ DC JACK(P/N 104492-00)	____ PC BD BRACKET-EXP(P/N 104455-00)
____ TOP SHIELD FOR CONNER(P/N 104512-00)	____ U-SHAPED INSULATOR-EXP(P/N 105323-00)
____ CONTRAST BD.-LCD(P/N 104530-00)	____ PLASTIC COVER GASCKET-EXP(P/N 104458-
_ BACKLITE BD.-LCD(P/N 104536-00)	____ BOTTOM TRAY-EXP(P/N 104457-00)
____ PATCH BD.(P/N 104633-00)	____ PWR CONTROL CABLE-EXP(P/N 104462-00
____ 40MB DRIVE COVER(P/N 104712-00)	____ DC JACK-EXP(P/N 105100-00)
____ BACKPLANE HOLDER(P/N 105358-00)	____ CONNER BRACKET(P/N 105393-00)

DAILY PICK LIST 880010-[illegible]
1500 SERIES

NAME: _____ DATE: _____

PLASMA INTENSITY SW.(P/N 104911-00)
____ FEET(P/N 100119-00)
____ BATTERY LATCH(P/N 102135-00)
____ BATTERY EJECT BUTTON(P/N 101331-00)
____ BATTERY BACKPLANE(P/N 104170-000
____ ROM COVER(P/N 104072-00)
____ RIGHT LEG(P/N 104119-00)
____ LEFT LEG(P/N 104159-00)
____ HANDLE ASSEMBLY(P/N 104120-00)
____ MYLAR FOR BASE MAG(P/N 104161-00)
____ DUAL FLOPPY BRACKET RT(P/N 104233-00)
____ DUAL FLOPPY BRACKET LT(P/N 104234-00)
____ LEFT SLIDER SWITCH(P/N 104202-00)
____ PLASMA DUMMY SWITCH(P/N 104203-00)
____ BATTERY TRAY (P/N 104204-00)
____ DISPLAY CABLE-PLASMA(P/N 104222-00)
____ DISPLAY CABLE-LCD(P/N 104223-00)
____ RT HINGE EAR(P/N 105968-00)
LT HINGE EAR (P/N 102326-00)
____ BRACKET FOR 40MB HD(P/N 104331-00)
____ PLASMA SLIDER SWITCH(P/N 104349-00)
____ BEZEL FOR JVC(P/N 104411-00)
____ CABLE L/B-INTERFACE BD(1535)(P/N 104462-00)
____ DC JACK(P/N 104492-00)
____ TOP SHIELD FOR CONNER(P/N 104512-00)
____ CONTRAST BD.-LCD(P/N 104530-00)
____ BACKLITE BD.-LCD(P/N 104536-00)
____ PATCH BD.(P/N 104633-00)
____ 40MB DRIVE COVER(P/N 104712-00)
____ BACKPLANE HOLDER(P/N 105358-00)

____ JVC CABLE(P/N 104722-00)
____ CONNER BRKT-LT(P/N 104930-00
____ CONNER BRKT-RT(P/N 104929-00)
____ INSULATOR 20MB BKPLANE(P/N 105[illegible]
____ BOTTOM SHIELD CONNER(P/N 105118-00)
____ INSULATOR 40MB BKPLANE(P/N 105396-00)
____ SPRING BATTERY TRAY(P/N 280081-00)
____ INSULATOR BATTERY HOUSING(P/N 104499-00
____ BASEMAG W/BEZEL(P/N 104957-00)
____ TOP COVER W/BEZEL(P/N 104954-00)
____ BASEMAG NO BEZEL(P/N 104164-000
____ TOP COVER NO BEZEL(P/N 104168-00)
____ REAR PANEL MAG(P/N 104157-00)
____ DISPLAY HOUSING(P/N 101714-00)
____ KEYBOARD FRAME(P/N 104071-00)
____ DISPLAY FRAME(LCD)(P/N 104478-[illegible]
____ DISPLAY FRAME(PLASMA)(P/N 104[illegible]
____ BASE PAN-EXP(P/N 104456-00)
____ COVER GASCKET-BLK-EXP(P/N 104458-00)
____ INSULATOR BATTERY HOUSING(P/N 102264-00
____ SMALL FAN-EXP(P/N 104208-00)
____ MOUNTING BRACKET-EXP(P/N 103789-00
____ PC BD BRACKET-EXP(P/N 104455-00)
____ U-SHAPED INSULATOR-EXP(P/N 105323-00
____ PLASTIC COVER GASCKET-EXP(P/N 104458-00
____ BOTTOM TRAY-EXP(P/N 104457-00)
____ PWR CONTROL CABLE-EXP(P/N 104462-00
____ DC JACK-EXP(P/N 105132-00)
____ CONNER BRACKET(P/N 105393-00)

DAILY PICK LIST 8[illegible] PARTS
1500 SERIES

NAME: _____ DATE: _____

PLASMA INTENSITY SW.(P/N 104911-00)
____ FEET(P/N 100119-00)
____ BATTERY LATCH(P/N 102135-00)
____ BATTERY EJECT BUTTON(P/N 101331-00)
____ BATTERY BACKPLANE(P/N 104170-000
____ ROM COVER(P/N 104072-00)
____ RIGHT LEG(P/N 104119-00)
____ LEFT LEG(P/N 104159-00)
____ HANDLE ASSEMBLY(P/N 104120-00)
____ MYLAR FOR BASE MAG(P/N 104161-00)
____ DUAL FLOPPY BRACKET RT(P/N 104233-00)
____ DUAL FLOPPY BRACKET LT(P/N 104234-00)
____ LEFT SLIDER SWITCH(P/N 104202-00)
____ PLASMA DUMMY SWITCH(P/N 104203-00)
____ BATTERY TRAY (P/N 104204-00)
____ DISPLAY CABLE-PLASMA(P/N 104222-00)
____ DISPLAY CABLE-LCD(P/N 104223-00)
____ RT HINGE EAR(P/N 105968-00)
LT HINGE ERA (P/N 102326-00)
____ BRACKET FOR 40MB HD(P/N 104331-00)
____ PLASMA SLIDER SWITCH(P/N 104349-00)
____ BEZEL FOR JVC(P/N 104411-00)
____ CABLE L/B-INTERFACE BD(1535)(P/N 104462-00)
____ DC JACK(P/N 104492-00)
____ TOP SHIELD FOR CONNER(P/N 104512-00)
____ CONTRAST BD.-LCD(P/N 104530-00)
____ BACKLITE BD.-LCD(P/N 104536-00)
____ PATCH BD.(P/N 104633-00)
____ 40MB DRIVE COVER(P/N 104712-00)
BACKPLANE HOLDER(P/N 105358-00)

____ JVC CABLE(P/N 104722-00)
____ CONNER BRKT-LT(P/N 104930-00
____ CONNER BRKT-RT(P/N 104929-00)
____ INSULATOR 20MB BKPLANE(P/N 105080-00)
____ BOTTOM SHIELD CONNER(P/N 105119-00)
____ INSULATOR 40MB BKPLANE(P/N 105396-00)
____ SPRING BATTERY TRAY(P/N 280081-00)
____ INSULATOR BATTERY HOUSING(P/N 104499-0
____ BASEMAG W/BEZEL(P/N 104957-00)
____ TOP COVER W/BEZEL(P/N 104954-00)
____ BASEMAG NO BEZEL(P/N 104164-000
____ TOP COVER NO BEZEL(P/N 104168-00)
____ REAR PANEL MAG(P/N 104157-00)
____ DISPLAY HOUSING(P/N 101714-00)
____ KEYBOARD FRAME(P/N 104071-00)
____ DISPLAY FRAME(LCD)(P/N 104478-00)
____ DISPLAY FRAME(PLASMA)(P/N 104201-00)
____ BASE PAN-EXP(P/N 104456-00)
____ COVER GASCKET-BLK-EXP(P/N 104458-00)
____ INSULATOR BATTERY HOUSING(P/N 102264-0
____ SMALL FAN-EXP(P/N 104208-00)
____ MOUNTING BRACKET-EXP(P/N 103789-00)
____ PC BD BRACKET-EXP(P/N 104455-00)
____ U-SHAPED INSULATOR-EXP(P/N 105323-00)
____ PLASTIC COVER GASCKET-EXP(P/N 104459-0
____ BOTTOM TRAY-EXP(P/N 104457-00)
____ PWR CONTROL CABLE-EXP(P/N 104462-00)
____ DC JACK-EXP(P/N 105132-00)
CONNER BRACKET(P/N 105393-00)

DAILY PICK LIST 800010-00 PARTS
1500 SERIES

NAME: _____ DATE: _____

PLASMA INTENSITY SW.(P/N 104911-00)
___ FEET(P/N 100119-00)
___ BATTERY LATCH(P/N 102135-00)
___ BATTERY EJECT BUTTON(P/N 101331-00)
___ BATTERY BACKPLANE(P/N 104170-000
___ ROM COVER(P/N 104072-00)
___ RIGHT LEG(P/N 104119-00)
___ LEFT LEG(P/N 104159-00)
___ HANDLE ASSEMBLY(P/N 104120-00)
___ MYLAR FOR BASE MAG(P/N 104161-00)
___ DUAL FLOPPY BRACKET RT(P/N 104233-00)
___ DUAL FLOPPY BRACKET LT(P/N 104234-00)
LEFT SLIDER SWITCH(P/N 104202-00)
___ PLASMA DUMMY SWITCH(P/N 104203-00)
___ BATTERY TRAY (P/N 104204-00)
___ DISPLAY CABLE-PLASMA(P/N 104222-00)
___ DISPLAY CABLE-LCD(P/N 104223-00)
___ RT HINGE EAR(P/N 105968-00)
LT HINGE EAR (P/N 102326-00)
___ BRACKET FOR 40MB HD(P/N 104331-00)
___ PLASMA SLIDER SWITCH(P/N 104349-00)
___ BEZEL FOR JVC(P/N 104411-00)
___ CABLE L/B-INTERFACE BD(1535)(P/N 104462-00)
___ DC JACK(P/N 104492-00)
___ TOP SHIELD FOR CONNER(P/N 104512-00)
CONTRAST BD.-LCD(P/N 104530-00)
BACKLITE BD.-LCD(P/N 104536-00)
___ PATCH BD.(P/N 104633-00)
40MB DRIVE COVER(P/N 104712-00)

___ JVC CABLE(P/N 104722-00)
___ CONNER BRKT-LT(P/N 104930-00
___ CONNER BRKT-RT(P/N 104929-00)
___ INSULATOR 20MB BKPLANE(P/N 105090-00)
___ BOTTOM SHIELD CONNER(P/N 105118-00)
___ INSULATOR 40MB BKPLANE(P/N 105396-00)
___ SPRING BATTERY TRAY(P/N 280081-00)
___ INSULATOR BATTERY HOUSING(P/N 104499-0
___ BASEMAG W/BEZEL(P/N 104957-00)
___ TOP COVER W/BEZEL(P/N 104954-00)
___ BASEMAG NO BEZEL(P/N 104164-000
___ TOP COVER NO BEZEL(P/N 104168-00)
___ REAR PANEL MAG(P/N 104157-00)
___ DISPLAY HOUSING(P/N 101714-00)
___ KEYBOARD FRAME(P/N 104071-00)
___ DISPLAY FRAME(LCD)(P/N 104478-00)
___ DISPLAY FRAME(PLASMA)(P/N 104201-00)
___ BASE PAN-EXP(P/N 104456-00)
___ COVER GASCKET-BLK-EXP(P/N 104459-00)
___ INSULATOR BATTERY HOUSING(P/N 102264-0
___ SMALL FAN-EXP(P/N 104208-00)
___ MOUNTING BRACKET-EXP(P/N 103789-00)
___ PC BD BRACKET-EXP(P/N 104455-00)
___ U-SHAPED INSULATOR-EXP(P/N 105323-00)
___ PLASTIC COVER GASCKET-EXP(P/N 104458-0
___ BOTTOM TRAY-EXP(P/N 104457-00)
___ PWR CONTROL CABLE-EXP(P/N 104462-00)
DC JACK-EXP(P/N 105132-00)

Video Card: Two application ROM sockets and the video control circuitry for the system are located on the video card. The ROM sockets have 32 pins, allowing 128KB EPROMs and 128KB masked ROMs to be used. The video circuitry consists of the Yamaha 6366 video controller, 32KB of video RAM, 32KB character generator ROM, and support circuitry. The video board can drive 640 by 400 pixel Plasma and LCD display panels, and optionally can drive 640 by 200 Plasma display panels. The video card can be software switched to drive an external RGB monitor as well. When operating under MS-DOS, the key sequence CTRL-ALT-TAB toggles video output between the internal display and the external RGB monitor. The video card does not allow the operation of the internal display and the external monitor simultaneously.

Keyboard: The GRiDCASE has a 72 key keyboard. The use of the FN and ALT keys makes this keyboard fully IBM compatible. The keyboard is a passive switch matrix. All of the electronics for scanning the switch matrix and interpretting keystrokes is built into the main logic board of the system.

Battery Backplane (expansion bus board): Access to the XTIO or ATIO expansion bus is available through the battery backplane, or expansion bus board, located at the forward end of the battery tray.

U.S.Robotics Modem: This modem provides asynchronous communication at either 2400, 1200, or 300 baud. The modem is accessed via a dedicated serial port (referred to by MS-DOS as COM1) on the main logic board. The modem is Hayes protocol compatible, and Bell and CCITT(V.22bis) communications compatible.

Storage Device Options

The GRiDCASE 1500 series systems come with one of the following four storage device options: two high-density floppy drives, a 20MB hard drive and a floppy drive, a 40MB hard drive and a floppy drive, and a single 40MB/100MB hard drive. The storage device or devices are constructed as one module; consisting of the storage device or devices, a backplane board (specific to the option), and mounting clamps.

Internal Floppy Disk Drive: 3 1/2" Double-Sided, High-Density, 1.44MB floppy disk drive. The drive accepts either high-density format 1.44MB disks or double-density format 720KB disks.

Internal Hard Disk Drive: All Connors hard drive options require +12 and +5 VDC to operate.

Display Options

Three internal display options are available for the GRiDCASE 1500 systems: low-power, 640 by 400 pixel plasma panel; low-power, 640 by 200 pixel plasma panel; EL backlit, 640 by 400 pixel, transflective (yellow) LCD panel; and EL backlit, 640 by 400 pixel, transmissive (blue) LCD panel. A 33 volt DC/DC converter must be used with the plasma panel displays. Similarly, a special DC/DC converter which generates the 180 volts AC supply for the EL backlight, must be used with the LCD panels.

DC/DC Converters

Two different DC/DC converters are used in the GRiDCASE 1500 systems. The DC/DC converter used with systems with EL backlit, LCD displays has outputs of -15, +5, +12 VDC, and a switchable 100 VAC used to operate the EL backlight of the display. The DC/DC converter used with systems with plasma displays has outputs of -15, +5, +12, and +33 VDC. Both DC/DC converters require an input between 9 and 20 VDC to operate.