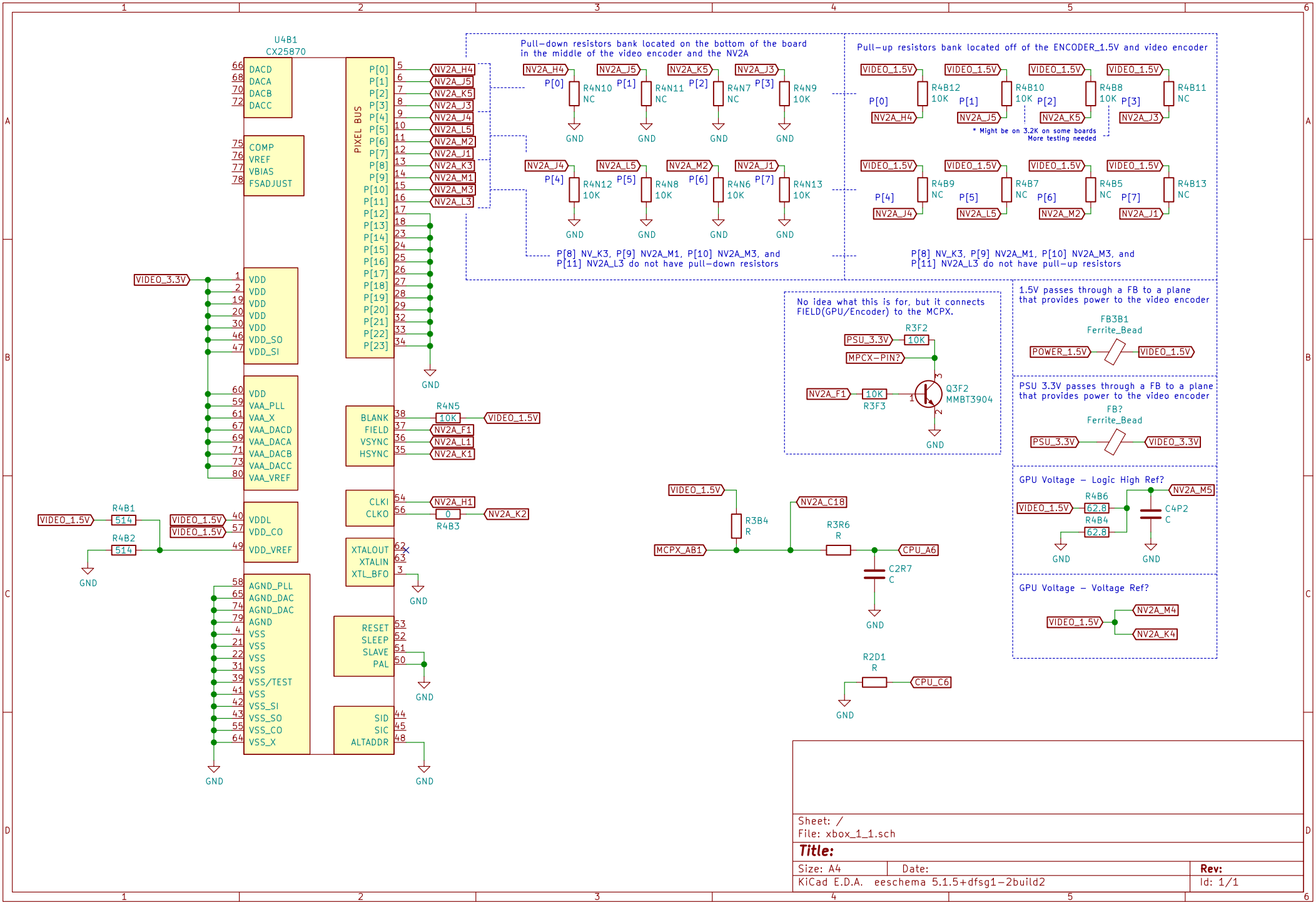
U4B1
CX25870
DACD
DACA
DACB
DACC
COMP
VREF
VBIAS
FSADJUST
PIXEL BUS
P[0]
P[1]
P[2]
P[3]
P[4]
P[5]
P[6]
P[7]
P[8]
P[9]
P[10]
P[11]
P[12]
P[13]
P[14]
P[15]
P[16]
P[17]
P[18]
P[19]
P[20]
P[21]
P[22]
P[23]
NV2A_H4
NV2A_J5
NV2A_K5
NV2A_J3
NV2A_J4
NV2A_L5
NV2A_M2
NV2A_J1
NV2A_K3
NV2A_M1
NV2A_M3
NV2A_L3
Pull-down resistors bank located on the bottom of the board
in the middle of the video encoder and the NV2A
R4N10
NC
R4N11
NC
R4N7
NC
R4N9
10K
R4N12
10K
R4N8
10K
R4N6
10K
R4N13
10K
GND
P[8] NV_K3, P[9] NV2A_M1, P[10] NV2A_M3, and
P[11] NV2A_L3 do not have pull-down resistors
Pull-up resistors bank located off of the ENCODER_1.5V and video encoder
VIDEO_1.5V
R4B12
10K
R4B10
10K
R4B8
10K
R4B11
NC
R4B9
NC
R4B7
NC
R4B5
NC
R4B13
NC
* Might be on 3.2K on some boards
More testing needed
P[8] NV_K3, P[9] NV2A_M1, P[10] NV2A_M3, and
P[11] NV2A_L3 do not have pull-up resistors
VIDEO_3.3V
VDD
VDD_SO
VDD_SI
VAA_PLL
VAA_X
VAA_DACD
VAA_DACA
VAA_DACB
VAA_DACC
VAA_VREF
VDDL
VDD_CO
VDD_VREF
AGND_PLL
AGND_DAC
AGND
VSS
VSS/TEST
VSS_SI
VSS_SO
VSS_CO
VSS_X
BLANK
FIELD
VSYNC
HSYNC
R4N5
10K
NV2A_F1
NV2A_L1
NV2A_K1
CLKI
CLKO
NV2A_H1
NV2A_K2
R4B3
0
XTALOUT
XTALIN
XTL_BFO
RESET
SLEEP
SLAVE
PAL
SID
SIC
ALTADDR
R4B1
514
R4B2
514
No idea what this is for, but it connects
FIELD(GPU/Encoder) to the MCPX.
PSU_3.3V
R3F2
10K
MPCX-PIN?
NV2A_F1
R3F3
Q3F2
MMBT3904
1.5V passes through a FB to a plane
that provides power to the video encoder
FB3B1
Ferrite_Bead
POWER_1.5V
PSU 3.3V passes through a FB to a plane
that provides power to the video encoder
FB?
Ferrite_Bead
GPU Voltage - Logic High Ref?
R4B6
62.8
R4B4
62.8
C4P2
C
NV2A_M5
GPU Voltage - Voltage Ref?
NV2A_M4
NV2A_K4
R3B4
R
NV2A_C18
R3R6
R
MCPX_AB1
CPU_A6
C2R7
C
R2D1
R
CPU_C6
Sheet: /
File: xbox_1_1.sch
Title:
Size: A4
Date:
Rev:
KiCad E.D.A. eeschema 5.1.5+dfsg1-2build2
Id: 1/1