TANDY 1000 TL/2 (250-1602) Layout Faxback Doc. # 1230

Note: Refer to Faxback Doc. # 1222 for setting this board.

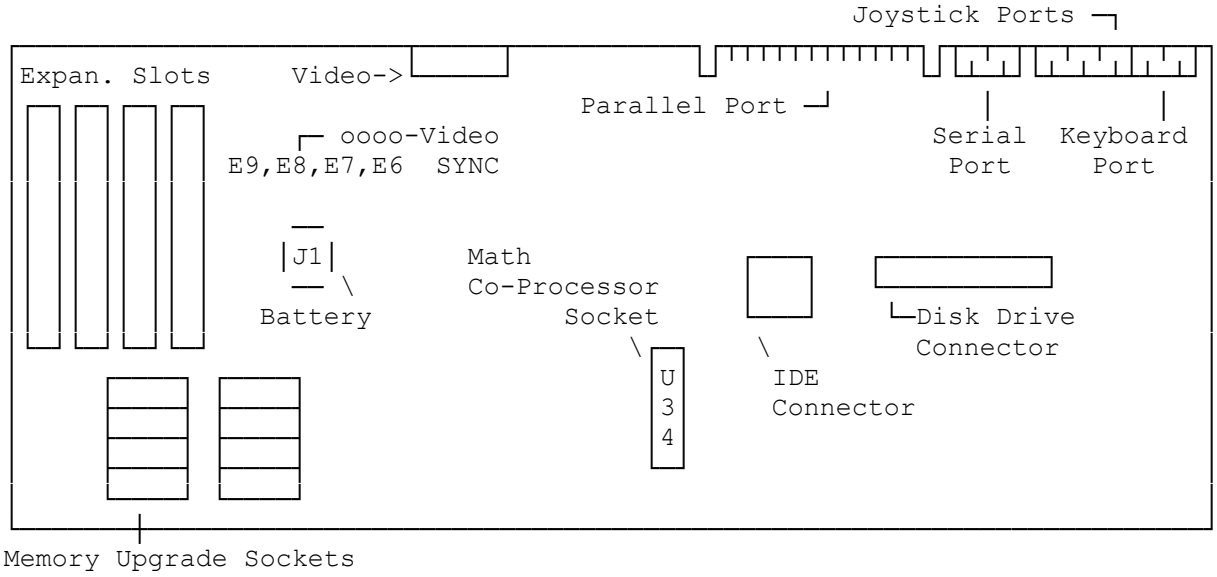

Audio Interface Board:

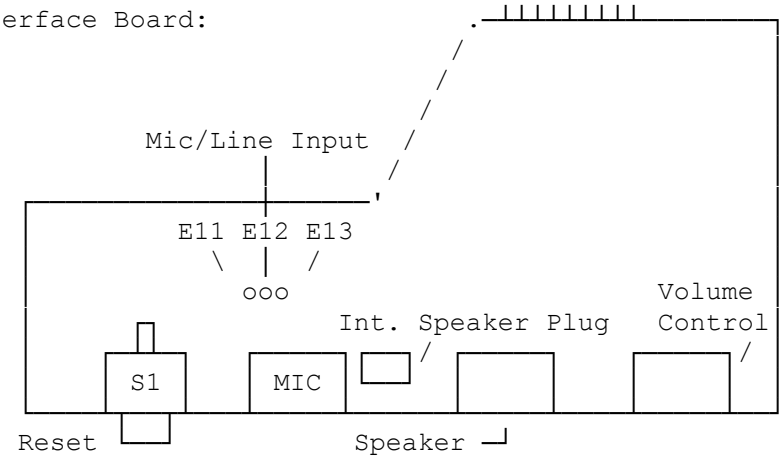

(rjs-05/27/93)