1000A (250-1000A) Main Logic Board Faxback Doc. # 1998

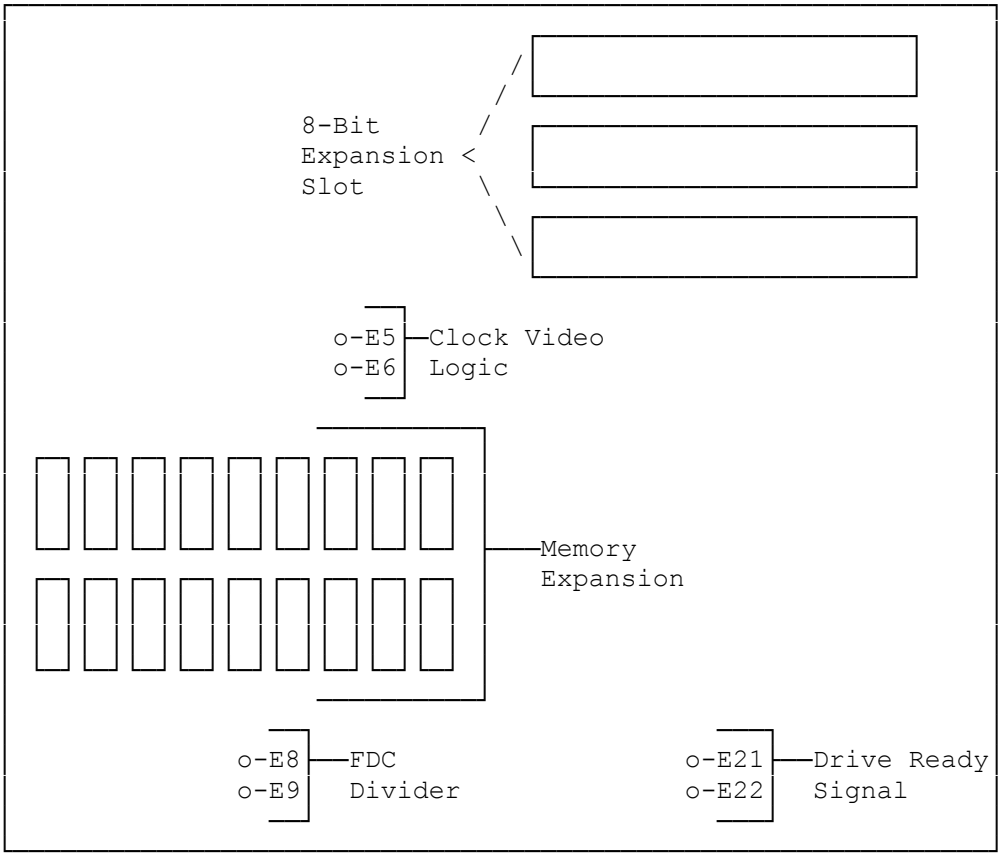

(smm/jej-05/11/94)